SPORT
UTILITY
VEHICLES

mahindra Rise

THAR ROXX

'THE' SUV

*Creative visualisation. For illustrative purpose only.

*Creative visualisation. For illustrative purpose only.

‘THE’ SUV.

What’s that?

Just a title? No.

It’s a new standard. The only one that matters.

A universal constant.

And here’s the thing about universal constants.

They are definite. Undisputed. Uncontested.

For the rest of time. Period.

THE DESIGN

How do you improve on something that's already great? Well, you deconstruct it and build it back from the ground up. Only better. The short overhangs combined with a wider stance, the upright A Pillar with the flat windshield , the presence is even more commanding and when you see it, you'll know why it's called 'THE' SUV.

*Creative visualisation. For illustrative purpose only.

FORM AND PRESENCE

In the presence of 'THE' SUV, everything else looks lacklustre. From the External Hinges, Handlebars to the Tailgate mounted spare-wheel, every little detail on the Thar Roxx gives off an air of boldness. The Thar Roxx takes what was already iconic and elevates it to new heights - the wheelbase is longer, Flat, solid and smooth surfaces everywhere you look, The Thar Roxx is unmistakably a Thar and undoubtedly 'THE' SUV.

*Creative visualisation. For illustrative purpose only.

DUAL-TONE METAL ROOF

The Dual-tone Metal Roof pays homage to the Thar adventure aesthetic, with a sleek black matte finish. But it's there for more than just looks. The roof is solid metal and is as sturdy as it gets. It's easy on the eyes, strong to the touch and ready for anything.

*Creative visualisation. For illustrative purpose only.

C-SHAPED LED DRLS

We dare you to break eye-contact - Because once you're in its gaze, it gets harder and harder to look away. Like two crescent moons illuminating the night, the new C-shaped LED DRLs are a mesmerising addition to the front look of the Thar Roxx. And to complete the effect, on the rear are added equally iconic and instantly recognizable taillamps.

*Creative visualisation. For illustrative purpose only.
Important: For complete terms, conditions and limitations, please see the full disclaimer on the last page.

'THE' GRILLE

Stylish - Sleek - Imposing - just some words that will run through your mind when you see the Thar Roxx. The new grille is inimitably a Thar, with a polished edge to it.

R19 DIAMOND CUT ALLOY WHEELS

Framed within signature trapezoidal wheel arches, the Thar Roxx offers class-leading* All Terrain R19 wheels. When you look at them, you know that they're designed for just one thing – to literally elevate you over other SUVs.

*Creative visualisation. For illustrative purpose only.

THE ARCHITECTURE

The foundation of 'THE' SUV is its revolutionary M_GLYDE PLATFORM chassis made with high-strength steel. Solid as a rock, high on torsional stiffness and light on weight, the chassis sets a new benchmark for comfort and strength. With the highest wheelbase in the segment*, you can expect unparalleled stability and ultimate comfort. It doesn't just marry dynamics and handling seamlessly but is the reason the Thar Roxx will forever be known as 'THE' SUV.

ALL-NEW M_GLYDE PLATFORM

*Creative visualisation. For illustrative purpose only.
Important: For complete terms, conditions and limitations, please see the full disclaimer on the last page.

PERFECT PROPORTIONS

Innovation. One simple word that serves as the blueprint for 'THE' SUV. It's got a length of 4428 mm, a width of 1870 mm and a height of 1923 mm. But these numbers are more than just its dimensions, they're an extension of what people can expect from an SUV - The all-new architecture lends a commanding presence, enhanced comfort, smooth ride quality and safety to the Thar Roxx. The only thing that hasn't changed is the same iconic Thar form factor - Everything else is a product of game-changing innovations.

*Creative visualisation. For illustrative purpose only.

SAFE AS IT GETS

A product that's the result of best-in-class crash performance, Thar Roxx offers 35+ standard safety features which include 6 Airbags, comprehensive ESP 9.3 suite, Automatic Emergency Braking, and more.

BHARAT NCAP

'THE SUV' with 5 Stars Safety Rating.

THAR ROXX

Adult Occupant Rating	31.09	Child Occupant Rating	45.00

*Creative visualisation. For illustrative purpose only.
Important: For complete terms, conditions and limitations, please see the full disclaimer on the last page.

ALL-NEW SUSPENSION ARCHITECTURE

'THE' SUV is precision engineered for superior ride and handling. It offers Watt's-Link Suspension to minimize lateral axle movement, and MTV-CL/FDD to provide great ride quality, no matter the terrain. It's also the first SUV* to offer AHRS (Advanced Hydraulic Rebound Stop), providing excellent body control in undulated roads. But here's what it really means– superior handling, unmatched comfort and smooth, unwavering driving confidence.

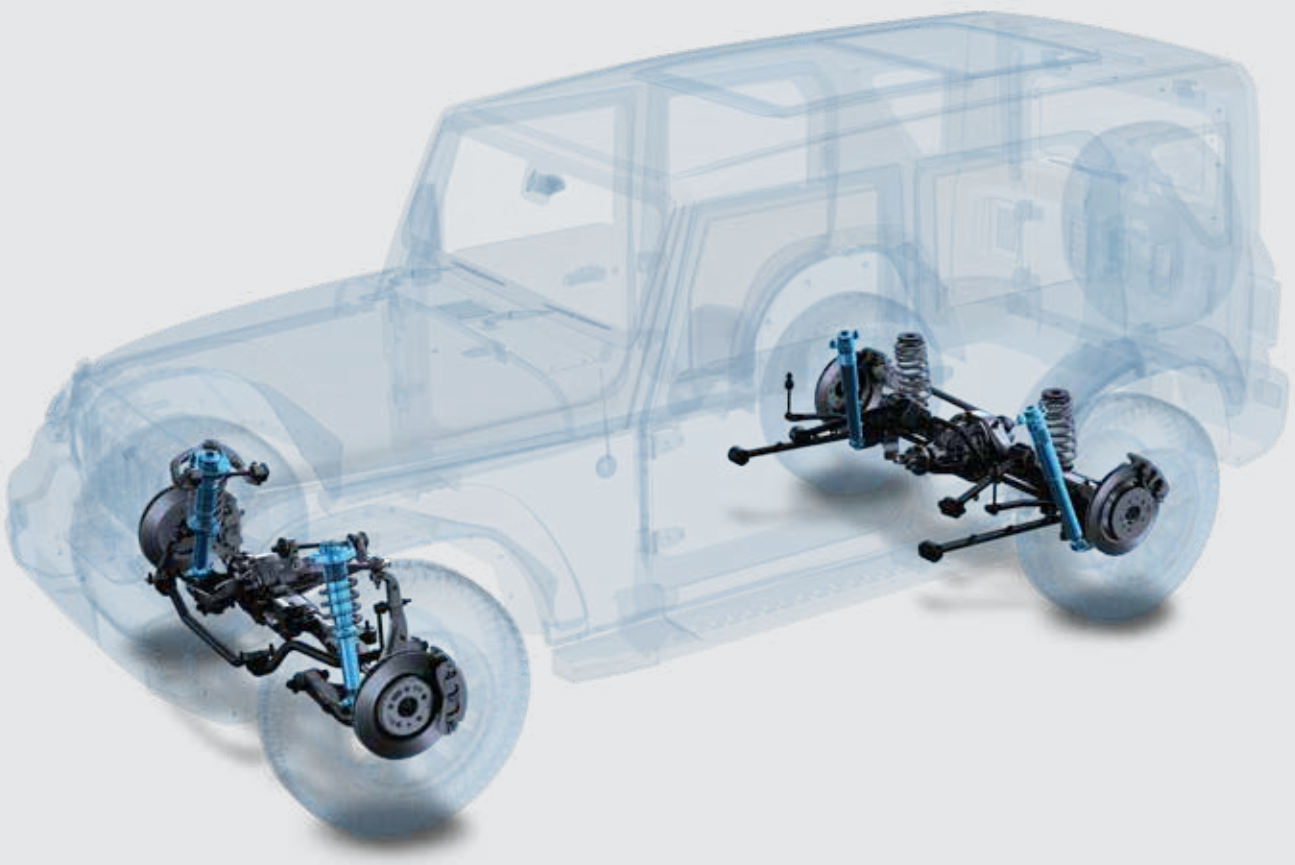

*Creative visualisation. For illustrative purpose only.
Important: For complete terms, conditions and limitations, please see the full disclaimer on the last page.

THE SOPHISTICATION

If the outside wasn't enough to blow you over, just wait till you get in. With a bold new interior - The Thar Roxx exudes refined ruggedness and enduring elegance.

*Creative visualisation. For illustrative purpose only.

SKYROOF™

In the Thar Roxx, the sky is the limit, courtesy of the largest panoramic sunroof in the segment.* Because when you're in 'THE' SUV, you don't have to reach for anything, not even the sky. Just press the button and simply let it in.

*Creative visualisation. For illustrative purpose only.
Important: For complete terms, conditions and limitations, please see the full disclaimer on the last page.

REAR SEAT A/C VENTS

Cool in the front, in the back, and everywhere else. The rear A/C vents in 'THE' SUV ensures no matter where you sit, you're always comfortable.

*Creative visualisation. For illustrative purpose only.
Important: For complete terms, conditions and limitations, please see the full disclaimer on the last page.

HARMAN/KARDON SOUND SYSTEM

With the new 9-speaker custom-tuned Harman Kardon Sound system, ‘THE’ SUV is nothing short of a concert on 4 wheels. Hip-hop, Rock and Roll, Jazz or Classical, no matter what your music taste, you'll always listen to it in the highest fidelity.
And to top it all up, there's Dolby Atmos - first-in-the-world technology that delivers a theatrical experience, right in your car.

*Creative visualisation. For illustrative purpose only.
Important: For complete terms, conditions and limitations, please see the full disclaimer on the last page.

POWERED AND VENTILATED SEATS

There's only one way to drive 'THE' SUV – like a king. And the road is yours to command when you get behind the wheel on your powered driver's seat throne. Like true royalty, the ventilated leatherette seats ensure you always have the coolest seats in the house, regardless of the temperature outside.

*Creative visualisation. For illustrative purpose only.
Important: For complete terms, conditions and limitations, please see the full disclaimer on the last page.

PLUSH, DARK AND HANDSOME

The Mocha Brown interior is built for the ones who like the darker side of adventure. The plush premium leatherette lets you get out of your comfort zone while staying in it.

Mocha Brown interiors now available in all AX7L and 4X4 variants.

*Creative visualisation. For illustrative purpose only.

QUIET LUXURY

Sometimes, silence speaks louder than words. Powerful on the outside but calm on the inside - The Thar Roxx has the best-in-class NVH with dampeners placed at key sections to ensure refinement and quietness in the cabin, at all high speeds.

*Creative visualisation. For illustrative purpose only.

FEEL FREE

'THE' SUV isn't just about creature comforts. It is an expression of true freedom – freedom of movement and storage beyond expectations. The extended wheelbase doesn't just aid in stability and ride quality but also provides the largest usable occupant space in the segment.* With ample head, shoulder and leg room - you'll never have to squeeze or adjust for anything, whether it's your luggage or yourself.

*Creative visualisation. For illustrative purpose only.
Important: For complete terms, conditions and limitations, please see the full disclaimer on the last page.

THE CAPABILITY

The Thar Roxx is 'THE' definitive adventure vehicle. Unmatched capability? Adventure tech? All-terrain tyres? It's got it all. 'THE' SUV is not just the ultimate SUV ever produced, it's a glimpse into what a true-blue off-roader should be.

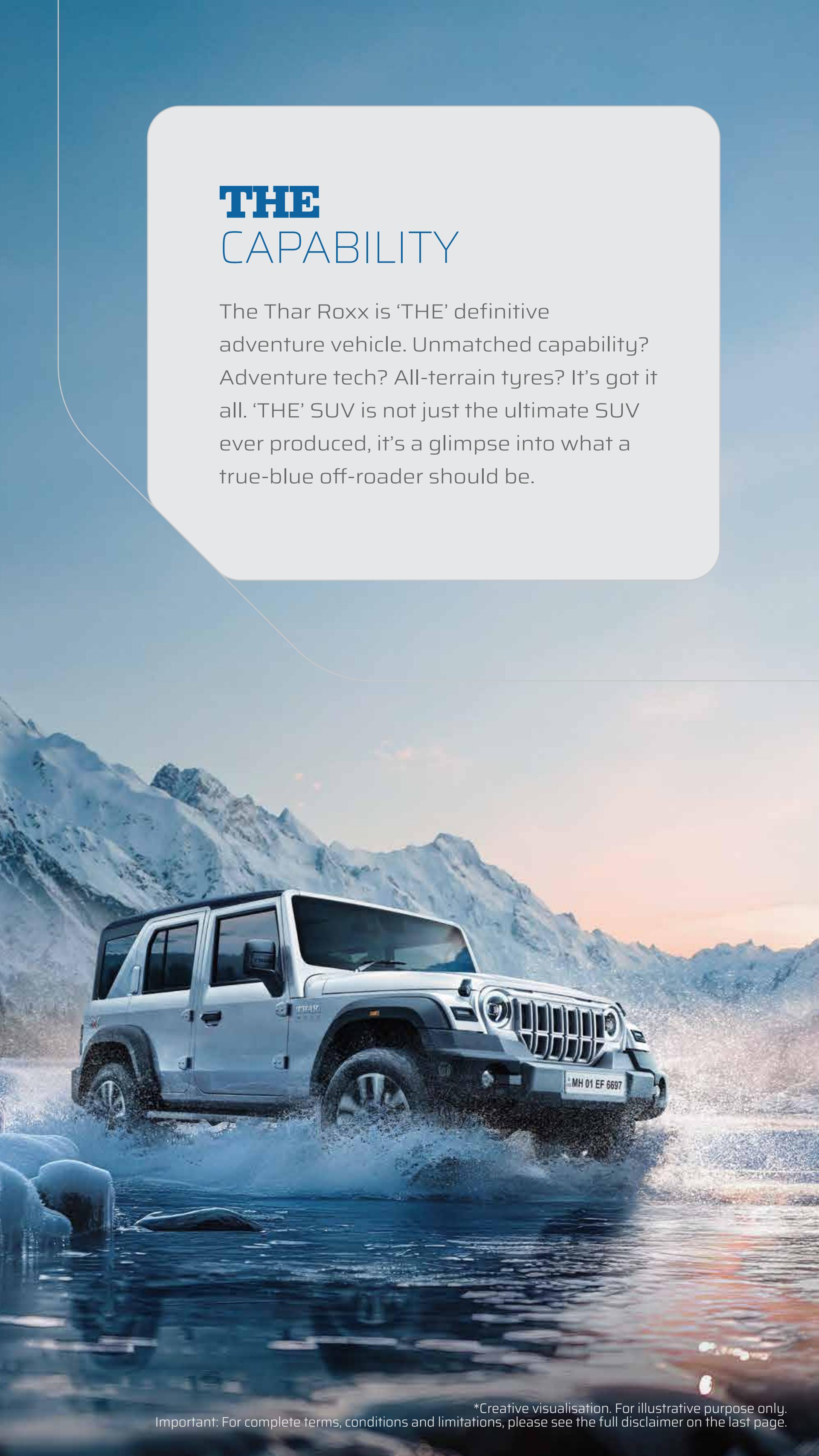

*Creative visualisation. For illustrative purpose only.
Important: For complete terms, conditions and limitations, please see the full disclaimer on the last page.

CRAWLSMART

Ever climbed a hill with zero effort? Well, there are some things only 'THE' SUV can do. The first vehicle by Indian OEMs to offer this feature, CrawlSmart detects obstacles and automatically adjusts throttle response to provide the optimal power needed.

*Creative visualisation. For illustrative purpose only.

INTELLITURN

Navigate tight U-turns or tricky off-road trails effortlessly, as Intelliturn takes the guesswork out of intricate turns. Just toggle it on, turn the wheel and nail every turn. When you're driving 'THE' SUV, you're never in a tight spot.

*Creative visualisation. For illustrative purpose only.

TERRAIN MODES AND DRIVE OPTIONS

Whether in 4-wheel drive or rear-wheel drive, you'll always unleash the full potential of 'THE' SUV. Equipped with versatile terrain modes, 650 mm of water-wading depth, and best departure and approach angles -'THE' SUV is engineered to tackle the toughest conditions.

Wading through water? Snow-covered trails? Sandy deserts surfaces? No problem. Snow, Mud or Sand – 4XPLOR Terrain modes combined with ELD make quick work of off-road trails while Zip and Zoom drive modes take care of your highway driving.

ELECTRONIC LOCKING DIFFERENTIAL

The superior Electronic Locking Differential (ELD) on the Thar Roxx, makes it the first vehicle by an Indian OEM to offer this feature, enhancing the vehicles off-road capability, setting a new standard for off-road enthusiasts. The electronic differential locks the rear axle in microseconds, so that the wheels get maximum traction to tackle challenging surfaces.

*Creative visualisation. For illustrative purpose only.

LEGENDARY ENGINES

Tuned and tested to perfection, the battle-tested mHawk and mStallion Engines are the true powerhouses of 'THE' SUV. With strong Low-end Torque and best-in-class Power and Torque ratings, the Thar Roxx may be a beauty on the outside, but is a beast on the inside.

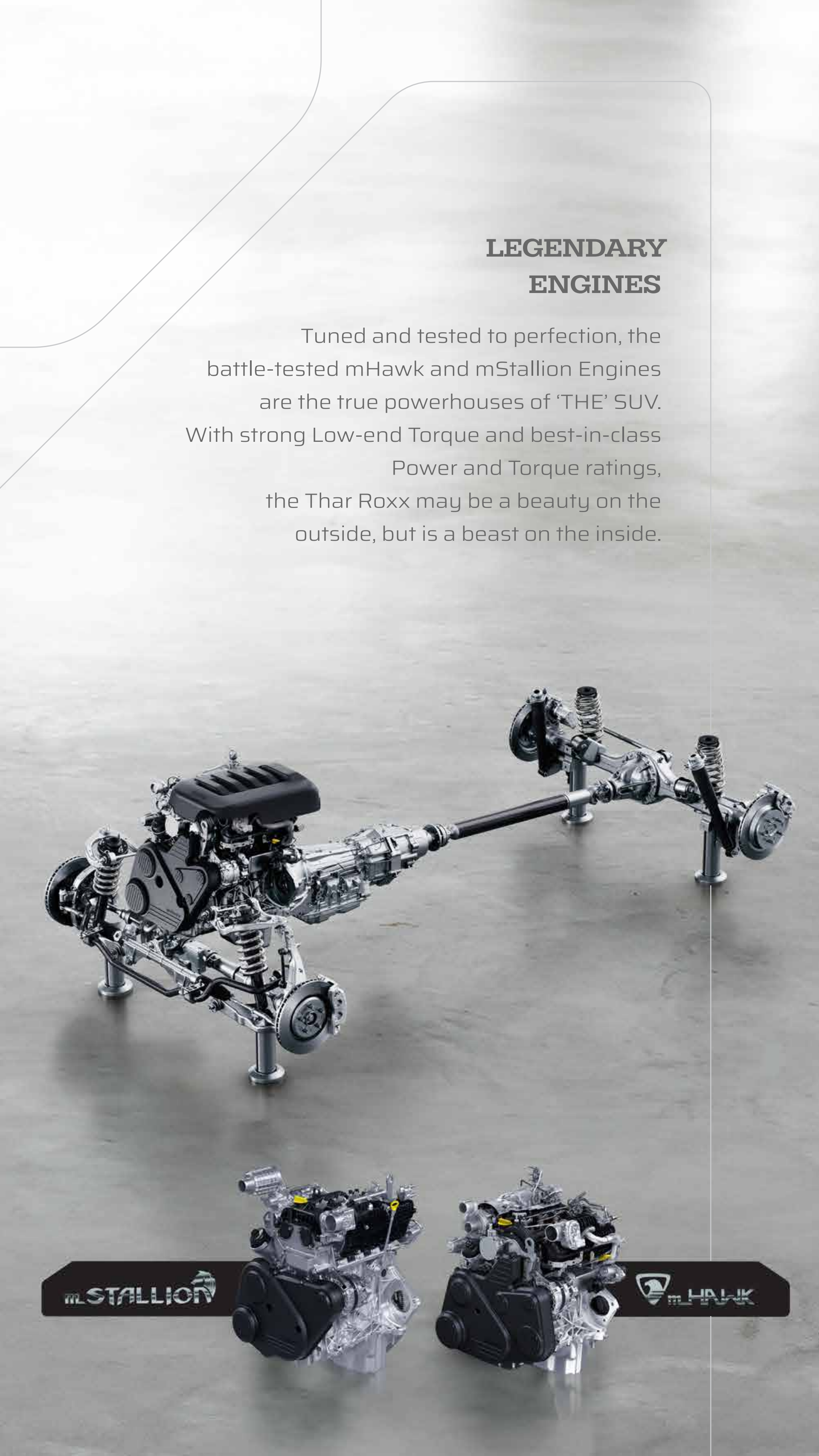

THE TECH

The future is on the move and it's got 4-wheels and 5-doors. Equipped with the latest in-car infotainment and driver information systems, sitting behind the wheel of the Thar Roxx feels like sitting in front of a hi-tech gadget.

*Creative visualisation. For illustrative purpose only.

ADAS LEVEL 2 SUITE

Say hello to the ADAS Level 2 suite, with 10 features, especially-designed and trained for Indian road conditions. Armed with forward collision warning and autonomous emergency braking features as well, rest assured that there are no surprises when you're driving 'THE' SUV.

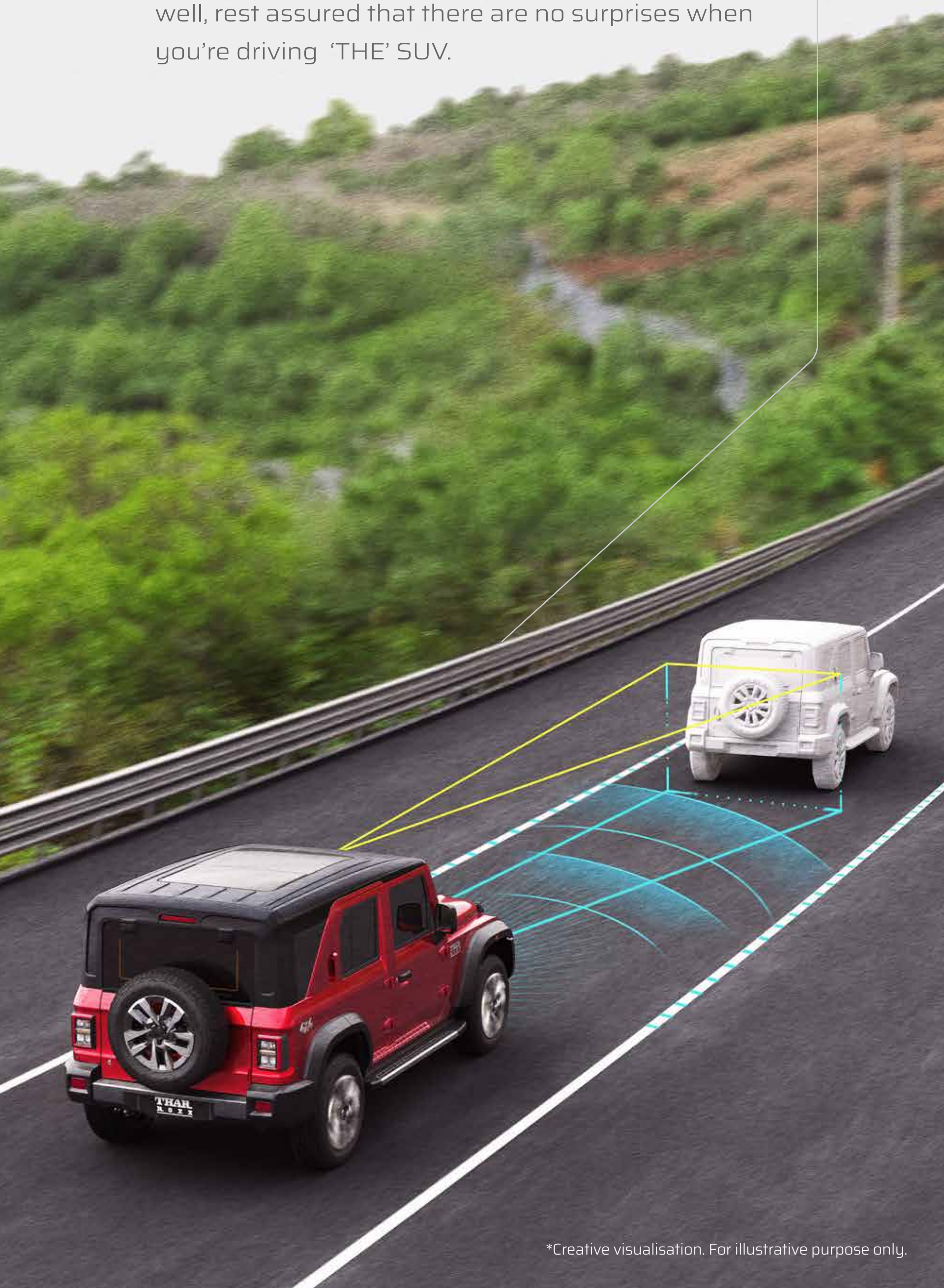

*Creative visualisation. For illustrative purpose only.

CONNECTED CAR TECHNOLOGY

Control your vehicle with voice commands, access navigation, and enjoy seamless connectivity wherever you go. All thanks to Adrenox and Alexa. And of course, power comes with no strings attached - ensuring you're always charged with the wireless charging pad.

*Creative visualisation. For illustrative purpose only.

‘THE’ DIGITAL COCKPIT

Immerse yourself in a world of connectivity and entertainment, brought alive by twin 26.03 cm digital screens, with support for Wireless Android Auto ™/Apple CarPlay™. Enjoy crystal-clear touchscreen navigation, hands-free calling, and stream your favourite music and podcasts on the go.

*Creative visualisation. For illustrative purpose only.
Important: For complete terms, conditions and limitations, please see the full disclaimer on the last page.

'THE' SUV SEES EVERYTHING

Another mission with the Thar Roxx was to provide you with the best vision while on the road. The auto-dimming IRVM reduces the on coming glare on the rear-view mirror so you're never caught off-guard, day or night. The 360^0 degree camera with a blind-view monitor ensures you have ultimate precision while backing up. And a novel new feature – the Obstacle view lets you look over any terrain, like an x-ray vision for your car.

*Creative visualisation. For illustrative purpose only.

Citrine Yellow

THAR ROXX | STAR EDN

Everest White

THE STAR IS ALWAYS IN THE SPOTLIGHT

There is a power a star holds.
Unsaid. Unquestioned.
No matter where it goes,
all eyes stay locked on it.
Always talked about.
Always followed.
Drive the Star Edn, and own
every glance.

Ste

Tango Red

PIANO BLACK GRILLE

PIANO BLACK FINISH ALLOY WHEELS

BLACK LEATHERETTE SEATS WITH SUEDE ACCENTS

*Creative visualisation. For illustrative purpose only.

THE COLOURS

Stealth Black*

Black

Tango Red

Black

Everest White

Black

Deep Forest

Black

Nebula Blue

Black

Battleship Grey

Black

Burnt Sienna

Black

*Dual Tone roofs on stealth black coloured vehicles is available in AX7L and AX5L only.
MX1, MX3, AX3L and MX5 have body coloured roofs in stealth black.

*Creative visualisation. For illustrative purpose only.

Specifications					
Type	Turbo Petrol Direct Injection (TGDI), mStallion (RWD)		Diesel Common Rail Direct Injection Technology - mHawk (RWD & 4x4)		
Capacity	2.0 L		2.2 L		
Transmission Type	6-Speed Manual Transmission	6-Speed Torque Converter Automatic	6-Speed Manual Transmission	6-Speed Torque Converter Automatic	6-Speed Torque Converter Automatic
Max Power	119kW @ 5000 r/min	130 kW @ 5000 r/min	111.9 kW @ 3750 r/min	111.9 kW @ 3750 r/min	128.6 kW @ 3500 r/min
Max Torque	330 Nm @ 1500-3000 r/min	380 Nm @ 1750 - 3000 r/min	330 Nm @ 1500-3000 r/min	330 Nm @ 1500-3000 r/min	400 Nm @ 1750-2750 r/min
Turbo Charger	eWGT - Electric Wastegate Turbo Charger, Intercooled		eVGT - Electric Variable Geometry Turbo Charger, Intercooled		
Variants	MX1 MX5	MX3 MX5 STAR EDN AX7L	MX1 MT (RWD) MX3 MT (RWD) MX5 MT (RWD & 4x4) AX3L MT (RWD) STAR EDN MT (RWD) AX7L MT (RWD & 4x4)	MX3 AT (RWD) MX5 AT (RWD)	AX5L AT (RWD & 4x4) AX7L AT (RWD & 4x4) STAR EDN AT (RWD)

Variants Matrix						
Variant	Petrol MT	Petrol AT	Diesel 2WD MT	Diesel 2WD AT	Diesel 4x4 MT	Diesel 4x4 AT
MX1	•		•			
MX3		•	•	•		
MX5	•	•	•	•	•	
AX3L			•			
AX5L				•		•
STAR EDN		•	•	•		
AX7L		•	•	•	•	•

Dimensions & Capacities	
Length	4428 mm
Width	1870 mm
Height	1923 mm
Wheelbase	2850 mm
Track Width	1580 mm (Front & Rear)
Approach Angle	41.7°
Departure Angle	36.1°
Ramp over Angle	23.9°
Water Wading Depth	650mm
Seating Capacity	5

Wheels & Tyres

Alloy Wheel:

255/65 R18 Diamond Cut Alloy (MX5,AX5L)

255/60 R19 Piano Black Finish Alloy Wheel (STAR EDN)

255/60 R19 Diamond Cut Alloy (AX7L)

255/65 R18 Steel Wheel (MX1,MX3, AX3L)

Spare Wheel:

255/65 R18 (MX1,MX3,MX5,AX3L,AX5L)

255/60 R19 (AX7L, STAR EDN)

Suspension

Front: Independent Front Suspension - Double Wishbone with Coil Spring with FDD (Frequency dependent damping) & MTV-CL (Multi tuning valve- Concentric land) dampers

Rear: Rigid Axle Coil Spring with WATT's Linkage with FDD (Frequency dependent damping), HRS (Hydraulic Rebound Stopper) & MTV-CL (Multi tuning valve- Concentric land) dampers

4x4

Manual Shift Part-Time 4x4 with High & Low Reduction Gear with ELD (Electric Locking Differential) | 2H mode with Front Axle disconnect

Brake	Steering	Fuel Tank Capacity
Ventilated Disc Front & Rear Disc / Rear Drum	Electric power steering with Tilt functionality	57 L

		MX1	MX3	AX3L	MX5	AX5L	STAR EDN	AX7L
Safety								
Airbag	Driver and Passenger	✓	✓	✓	✓	✓	✓	✓
	Side and Curtain	✓	✓	✓	✓	✓	✓	✓
Tyre Pressure Monitoring System		×	×	×	✓	✓	✓	✓
Parking Sensors		Rear	Rear	Rear	Rear + Front	Rear + Front	Rear + Front	Rear + Front
Rear Camera		×	✓	✓	✓	✓	✓	✓
3 Point Seat Belt for all Seats		✓	✓	✓	✓	✓	✓	✓
Seat Belt Reminder for all Seats with ODS		✓	✓	✓	✓	✓	✓	✓
Seat Belt Pretensioners - Front		✓	✓	✓	✓	✓	✓	✓
Height Adjustable Seat Belts Front		✓	✓	✓	✓	✓	✓	✓
Inside Rear View Mirror	Day Night	✓	✓	✓	✓	✓	-	-
	Auto Dimming	×	×	×	×	×	✓	✓
Impact Sensing Auto Door Unlock		✓	✓	✓	✓	✓	✓	✓
Immobilizer		✓	✓	✓	✓	✓	✓	✓
E-call & SOS		×	×	✓	×	✓	✓	✓
ISOFIX / i-SIZE Compatibility		✓	✓	✓	✓	✓	✓	✓
Rear Disc Brake		×	G- AT only	✓	G- AT & D-4x4 only	✓	✓	✓
Electronic stability and safety aids	Electronic stability Control (ESC)	✓	✓	✓	✓	✓	✓	✓
	Electronic Brake force Distribution (EBD)	✓	✓	✓	✓	✓	✓	✓
	Antilock Braking System & Corner Braking Control	✓	✓	✓	✓	✓	✓	✓
	Engine Drag Torque Control	✓	✓	✓	✓	✓	✓	✓
	Vehicles Dynamics Control (VDC)	✓	✓	✓	✓	✓	✓	✓
	Hill Hold Control (HHC)	✓	✓	✓	✓	✓	✓	✓
	Hill Decent Control (HDC)	✓	✓	✓	✓	✓	✓	✓
	Hydraulic Brake Assist (HBA)	✓	✓	✓	✓	✓	✓	✓
	Traction Control System (TCS)	✓	✓	✓	✓	✓	✓	✓
	Roll Over Mitigation (ROM)	✓	✓	✓	✓	✓	✓	✓
	Emergency Stop Signal	✓	✓	✓	✓	✓	✓	✓
	Brake Locking Differential (BLD)	✓	✓	✓	✓	✓	✓	✓
	Brake Disc Wiping	✓	✓	✓	✓	✓	✓	✓
Sci-Fi								
Adrenox connected car	Alexa built-in	×	×	3 year Subscription	×	3 year Subscription	1 year Subscription	3 year Subscription
	Vehicle status alerts	×	×	✓	×	✓	✓	✓
	Geo and location services	×	×	✓	×	✓	✓	✓
	Connected apps	×	×	✓	×	✓	✓	✓
	83 connected features	×	×	✓	×	✓	✓	✓
Remote commands	Climate control (only for AT)	×	×	✓	×	✓	✓	✓
	Skyroof control	×	×	×	×	×	✓	✓
	Engine start-stop (only for AT)	×	×	✓	×	✓	✓	✓
	Urea level and DPF Regen alert (For Diesel only)	×	×	✓	×	✓	✓	✓
Passive Keyless Entry		×	×	×	✓	✓	✓	✓
Smart wearable support		×	×	✓	×	✓	✓	✓
Gen II Adventure Statistics		×	✓	✓	✓	✓	✓	✓
Compass, Roll & Pitch, Altimeter		×	✓	✓	✓	✓	✓	✓
Harman Kardon (TM) Quantum Logic premium audio & Dolby Atmos		×	×	×	×	×	✓*	✓
DTS sound staging		×	×	✓	×	✓	×	×
Speakers		4	4	4	4	4	6	6
Tweeters		×	×	×	2	2	2	2
Sub-woofer		×	×	×	×	×	✓	✓
Touchscreen Infotainment (26.03 cm)		✓	×	×	×	×	×	×
HD Touchscreen Infotainment (26.03 cm)		×	✓	✓	✓	✓	✓	✓
Analogue Dials with MID cluster		✓	✓	×	✓	×	×	×
26.03 cm HD digital cluster		×	×	✓	×	✓	✓	✓
Inbuilt Navigation by MapMyIndia		×	×	✓	×	✓	✓	✓
Android Auto™		×	✓(Wired + Wireless)	✓(Wired + Wireless)	✓(Wired + Wireless)	✓(Wired + Wireless)	✓(Wired + Wireless)	✓(Wired + Wireless)
Apple CarPlay™		×	✓(Wired)	✓(Wired + Wireless)	✓(Wired)	✓(Wired + Wireless)	✓(Wired + Wireless)	✓(Wired + Wireless)
Wireless Charging		×	×	×	✓	✓	✓	✓
Steering Mounted Controls		✓	✓	✓	✓	✓	✓	✓
Front view camera		×	×	×	×	×	✓	✓
Blind view monitor		×	×	×	×	×	✓	✓
Obstacle view		×	×	×	×	×	✓	✓
Surround view camera		×	×	×	×	×	✓	✓
Electric Park Brake with Auto Hold		×	×	✓	×	✓	×	✓
Level 2 ADAS features	Autonomous Emergency Braking - Vehicles*	×	×	✓	×	✓	×	✓
	Autonomous Emergency Braking - Pedestrian	×	×	✓	×	✓	×	✓
	Autonomous Emergency Braking - Cyclist	×	×	✓	×	✓	×	✓
	Forward Collision Warning (FCW)	×	×	✓	×	✓	×	✓
	Adaptive Cruise Control (ACC) with Stop & Go	×	×	×	×	✓	×	AT variants
	Lane Departure Warning (LDW)	×	×	✓	×	✓	×	✓
	Lane Keep Assist (LKA)	×	×	✓	×	✓	×	✓
	Smart Pilot Assist (SPA)*	×	×	×	×	✓	×	AT variants
	High Beam Assist (HBA)	×	×	✓	×	✓	×	✓
	Traffic Sign Recognition (TSR)	×	×	✓	×	✓	×	✓

*STAR EDN does not have Dolby atoms.

	MX1	MX3	AX3L	MX5	AX5L	STAR EDN	AX7L
Premium, Comfort, Sophisticated							
Comfort							
6-Way Powered Driver Seat	×	×	×	×	×	×	✓
Front Ventilated Seats	×	×	×	×	×	✓	✓
Driver Seat Height Adjust	✓	✓	✓	✓	✓	✓	✓
Sliding Armrest	✓	✓	✓	✓	✓	✓	✓
60:40 Split Rear Seats with Multipoint recline	✓	✓	✓	✓	✓	✓	✓
Rear Seat Armrest with Cup-holder	×	✓	✓	✓	✓	✓	✓
HVAC	✓	✓	×	✓	×	×	×
Fully Automatic Temperature Control	×	×	✓	×	✓	✓	✓
Active carbon filter	×	×	✓	×	✓	✓	✓
Rear AC Vents	✓	✓	✓	✓	✓	✓	✓
Watts Link Rear Suspension	✓	✓	✓	✓	✓	✓	✓
HRS (Hydraulic Rebound Stop) + FDD (Frequency Dependent Damping) + MTV-CL (Multi tuning valve- Concentric land)	✓	✓	✓	✓	✓	✓	✓
Convenience							
Power Windows Front and Rear	✓	✓	✓	✓	✓	✓	✓
Driver Power Window One Touch Up/Down (Antipinch)	×	✓	✓	✓	✓	✓	✓
Electric Adjust ORVM	×	✓	✓	✓	✓	✓(With PowerFold)	✓(With Power Fold)
Auto Headlamp	×	×	✓	✓	✓	✓	✓
Auto Wiper	×	×	✓	✓	✓	✓	✓
Follow me Home Headlamp	✓	✓	✓	✓	✓	✓	✓
Lead me to Thar Roxx Headlamp	✓	✓	✓	✓	✓	✓	✓
Steering Mounted Controls	✓	✓	✓	✓	✓	✓	✓
Rear Wiper + Washer	×	✓	✓	✓	✓	✓	✓
Rear Defogger	×	✓	✓	✓	✓	✓	✓
Roof Lamp	Rear	Rear	Rear	Front + Rear	Front + Rear	Front + Rear	Front + Rear
12 V Power outlet	✓	✓	✓	✓	✓	✓	✓
Front USB Port-2 No (C type 15W+A type Data port)	×	✓	×	✓	×	×	×
Front USB Port-2 No (C type 65W+A type Data port)	×	×	✓	×	✓	✓	✓
Rear USB Port C type 15 W	✓	✓	✓	✓	✓	✓	✓
Cooled Glove Box	×	×	×	×	×	✓	✓
Speed sensing auto door locks	✓	✓	✓	✓	✓	✓	✓
Remote Central Locking	✓	✓	✓	✓	✓	✓	✓
Sophistication							
Premium Embossed Fabric Upholstery	✓	✓	✓	×	×	×	×
Leatherette Upholstery	×	×	×	✓	✓	✓	✓
Leatherette Wrap on Door Trims + IP	×	×	×	×	×	✓	✓
Leather Wrapped steering	×	×	×	✓	✓	✓(Premium)	✓(Premium)
Acoustic Windshield	×	×	✓	✓	✓	✓	✓
Foot well lighting	×	×	×	✓	✓	✓	✓
Push Button Start	✓	✓	✓	✓	✓	✓	✓
Engine Start Stop	✓	✓	✓	✓	✓	✓	✓
Tyre Direction Monitoring System	✓	✓	✓	✓	✓	✓	✓
Cruise Control	×	✓	✓	✓	✓	✓	✓
Presence - Exterior & Interiors							
R19 Wheels With 255/60 Tyres	-	-	-	-	-	Piano Black Finish	Diamond Cut Alloy
R18 Wheels With 255/65 Tyres	Steel	Steel	Steel	Diamond Cut Alloy	Diamond Cut Alloy	-	-
Sunroof Single Pane	×	×	×	✓	✓	×	×
Sunroof Panoramic (Skyroof)	×	×	×	×	×	✓	✓
LED Projectors Headlamps	✓	✓	✓	✓	✓	✓	✓
LED Daytime Running Lamps	×	×	×	✓	✓	✓	✓
LED Front Fog Lamps	×	×	×	✓	✓	✓	✓
LED Turn indicator on Fender	✓	✓	✓	✓	✓	✓	✓
LED Tail Lamps	✓	✓	✓	✓	✓	✓	✓
LED Centre High Mount Stop Lamp	✓	✓	✓	✓	✓	✓	✓
Antenna on LH Fender	✓	✓	✓	✓	✓	✓	✓
All Metallic Body Shell	✓	✓	✓	✓	✓	✓	✓
Spare Wheel	R18 Steel	R18 Steel	R18 Steel	R18 Steel	R18 Steel	R19 Alloy	R19 Alloy
Spare Wheel Cover	×	✓	✓	✓	✓	×	×
Skid Plates	✓	✓	✓	✓	✓	✓	✓
Split Tailgate	✓	✓	✓	✓	✓	✓	✓
Side Foot Step	✓	✓	✓	✓	✓	✓	✓
Dual Tone Interiors	✓	✓	✓	✓	✓	✓	✓
Lockable Glovebox	✓	✓	✓	✓	✓	×	×
Dashboard Grab Handle for Passenger	✓	✓	✓	✓	✓	✓	✓
A & B Pillar Entry Assist Handle	✓	✓	✓	✓	✓	✓	✓
Luggage net hooks in boot space	✓	✓	✓	✓	✓	✓	✓
Sunglass Holder	✓	✓	✓	✓	✓	×	×
Sunvisor with ticket holder (Driver side)	✓	✓	✓	✓	✓	✓	✓
Anchorage points for front mats	✓	✓	✓	✓	✓	✓	✓
Performance and Capability							
M_GLYDE Platform	✓	✓	✓	✓	✓	✓	✓
Gen II Adventure Statistics	×	✓	✓	✓	✓	✓	✓
Drive Modes (Zip & Zoom)	×	✓	✓	✓(RWD)	✓(RWD)	✓(RWD)	✓(RWD)
4XPLOR - Selectable Terrain Modes (Snow, Sand, Mud)	×	×	×	✓(Diesel 4x4)	✓(Diesel 4x4)	×	✓(Diesel 4x4)
XPLOR - Selectable Terrain Modes Snow, Sand, Mud	×	✓(RWD)	✓(RWD)	✓(RWD)	✓(RWD)	✓(RWD)	✓(RWD)
Washable mat with drain plug	✓	×	×	×	×	×	×
Brake Locking Differential	✓	✓	✓	✓	✓	✓	✓
CrawlSmart	×	×	×	×	✓(Diesel 4x4 AT)	×	✓(Diesel 4x4 AT)
IntelliTurn	×	×	×	×	✓(Diesel 4x4 AT)	×	✓(Diesel 4x4 AT)
Electric Driveline disconnect on front axle	×	×	×	✓(Diesel 4X4)	✓(Diesel 4X4)	×	✓(Diesel 4X4)
Electric Locking Differential	×	×	×	✓(Diesel 4X4)	✓(Diesel 4X4)	×	✓(Diesel 4X4)
Engine Start/Stop	✓	✓	✓	✓	✓	✓	✓

THAR ROXX

'THE' SUV

For any assistance, call us on our With You Hamesha toll-free number 1800 209 6006.
Mahindra & Mahindra Ltd. Marketing Office, Mahindra Towers, 3rd Floor, Akurli Road, Kandivali (E), Mumbai 400101.

Disclaimer: **Pg 8** – Alloy wheel designs are subject to change based on the vehicle variant. For exact specifications, please verify with your local dealership. Company is not liable for any discrepancies and reserves the right to alter specifications without prior notice. SUVs under 4.5m length. **Pg 9** – SUVs under 4.5m length. **Pg 12** – *from Indian OEMs. **Pg 14** – The sunroof feature, being the largest in the sub-4.5m segment, is available only in select variants. Specifications may vary; please consult your dealership for details. Company reserves the right to make changes without prior notice. SUVs under 4.5m length. **Pg 19** - The boot space volume of the vehicle has been measured as per ISOV2165 standards and may vary across different variants. For exact boot space dimensions, please refer to your local dealership. Company reserves the right to modify specifications without prior notice. SUVs under 4.5m length. **Pg 27** - Adrenox Connect with Built-in Alexa and shall be subject to subscription.For any assistance, call us on our With You Hamesha toll-free number 1800 209 6006. Mahindra & Mahindra Ltd. Marketing Office, Mahindra Towers, 3rd Floor, Akurli Road, Kandivali (E), Mumbai 400101.

All features mentioned in this booklet are not available on all the variants of Mahindra Thar Roxx ("Vehicle"). Accessories shown on the Vehicle are not part of the standard configuration and needs to be purchased separately. Performance figures shown are based on internal tests done by the experts in controlled environment. Actual performance figures may vary due to various factors such as driving conditions, maintenance, etc. and may differ in conditions. The images of the Vehicle shown are creative visualization and for illustrative purpose only. Tinted glass on the Vehicle is due to lighting effect. The colour of the Vehicle depicted in the image may differ from its actual appearance. Kindly visit your nearest Mahindra dealership to check the actual appearance of the Vehicle. Sunroof of the Vehicle is the largest sunroof in terms of dimensions in the sub-4.5m segment and this feature is available only in select variants of the Vehicle. Adrenox Application is available in select variants of the Vehicle. Harman Kardon audio system is available in select variants of the Vehicle. Harman Kardon and all related marks are registered trademarks of Harman and or its affiliates. Alexa feature is introduced to assist the Driver and improve the safety and convenience of driving a Vehicle. Alexa is only available in certain languages and regions. Alexa functionality may vary by location and variant of the Vehicle. Amazon, Alexa, and all related logos are trademarks of Amazon.com, Inc. or its affiliates. In view of our policy of continuously improving our products, we reserve the right to alter specifications or designs without prior notice and without liability to you. We reserve the right to add or delete any feature without prior notice and without any liability. Drive Modes are available in select variants of the vehicle. 'Android Auto' is a trademark of Google LLC and its affiliates. To use Android Auto on the Vehicle display, you will need an Android phone running Android 6.0 version or higher, an active data plan, and the Android Auto app. Apple Carplay is compatible only with select mobile devices with iOS operating system. The software and security mechanisms in the Vehicle are subject to ongoing developments. Like with computers or the operating systems of mobile devices, the software and security mechanisms in the Vehicle may also be updated at irregular intervals. MicroHybrid is available in all the variants. Smart Pilot Assist and Adaptive Cruise Control is only available on Tech pack (L) Automatic variants of the Vehicle. Advanced Driver Assistance System (ADAS) are meant to assist the driver to keep the passengers and pedestrians safe on the roads. ADAS is not a substitute for human eye and driver's vigilance. The driver shall remain fully responsible for safety, vigilant and attentive driving. 4-Wheel-Drive is available on select variants. Electronic Stability Program (ESP) is available on all variants. Only the Tech pack variants (L) come with Electronic Park Brake. All variants come with dual tone colour options only.

Features such as Apple CarPlay and Android Auto may not be available at the time of vehicle delivery and will be made available in due course. Mahindra assumes no liability in the event that Apple CarPlay and Android Auto are unavailable at the time of deliver.